P. JOSEPH LEHMAN, INC.
CONSULTING ENGINEERS

TRUSS REMOVAL PLAN

Cambria County Bridge 1

Keller Engineers, Inc.
ACCEPTED

12/13/2021

Date

Shawn Ritchey

Shawn S. Ritchey, P.E.
Project Engineer

Wrought Iron Bridge Works, LLC

Red Mill Road over North Branch Blacklick Creek
Blacklick Township, Cambria County, Pennsylvania
KEI # 3413

(PJL Project # 7033)

REVISED - December 13, 2021
December 9, 2021

TRUSS REMOVAL PLAN

FOR

RED MILL ROAD OVER NORTH BRANCH BLACKLICK CREEK
KEI # 3413
CAMBRIA COUNTY BRIDGE 1

IN

BLACKLICK TOWNSHIP, CAMBRIA COUNTY, PENNSYLVANIA

PREPARED FOR

Wrought Iron Bridge Works, LLC

PREPARED BY

P. Joseph Lehman, Inc.
Olde Farm Office Centre
P.O. Box 419
Hollidaysburg, PA 16648
(814) 695-7500

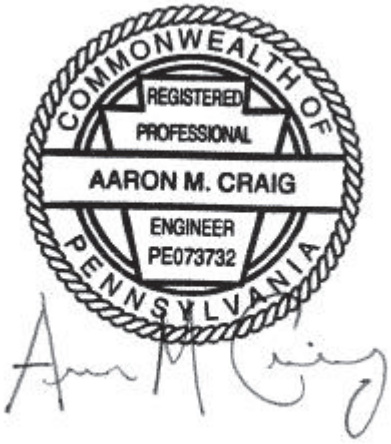

REVISED - December 13, 2021
December 9, 2021

TRUSS REMOVAL PLAN

Red Mill Road over North Branch Blacklick Creek - Cambria County Bridge 1

KEI # 3413

TABLE OF CONTENTS

Section 1: Notes & Sketches

Section 2: Methodology and Calculations

TRUSS REMOVAL PLAN

Red Mill Road over North Branch Blacklick Creek - Cambria County Bridge 1

KEI # 3413

Section 1: Notes & Sketches

TRUSS REMOVAL PLAN
Cambria County Bridge 1

BRIDGE REMOVAL PROCEDURE

GENERAL:

- Do NOT place any heavy equipment in the stream at any time.
- For temporary bracing and support assemblies member sizes, material strengths, and connection details shown are minimums. More robust installation may be provided.
- PRIORITIES FOR REMOVAL OF TRUSS:
    1) Safety of personnel and public.
    2) Minimizing environmental impact.
    3) Minimizing harm to historic bridge elements.

TRUSS REMOVAL:

To the maximum extent possible, removal of the truss superstructure will be performed in the approximate reverse order of original construction using lightweight methods and tools. This translates to working from the ends towards the center, panel by panel from each side. A boom truck will be utilized on the approach roadway to provide additional support and assistance for material removal as needed. The removal will progress as follows:

1) Add stabilizers (end post supports) to northern end post bases, extending from northern end posts beyond the abutment onto the roadway. (Northern abutment is in poor condition. Stabilizers will provide additional support / stability during removal in case of shifting of abutment.)

2) Remove concrete barriers and northernmost deck panels (2 bays).

3) Set section of deck panel between end post supports on north approach and tack weld to end post supports (to provide additional lateral stability when floor system is removed).

4) Remove northernmost stringers (2 bays).

5) Install temporary support system (false work) below bridge with supports at each end of each floorbeam.

6) Using hydraulic jacks, slightly raise structure at all temporary support locations (all lower pin / floorbeam locations except abutments) so that the entire superstructure is resting on the false work and top chord is “unlocked” (i.e. near zero load).

7) Match mark the historic elements, in situ or as removed.

8) Remove north end portal bracing, end posts, verticals, diagonals, and upper lateral bracing. During disassembly, provide temporary bracing and support to members in panel using chains and heavy-duty ratchet straps as needed. If compression bracing is necessary, steel angle or tubing will be used. Brace to other in place truss members, steel deck, stringers, or floor beams as needed. Remove field bolts by unthreading if possible. Remove seized field bolts and field rivets with rivet buster or similar means. Care will be taken so as to not damage the truss components. Remove bridge railing as truss removal progresses. Lower chord and floor beams to remain in place.

9) Proceed with removal of successive truss panels working panel by panel. Preferred operation: ends towards the center (reverse of original build) with alternate direction of operation: north to south (will depend on location of original field connections). Lower chord, deck, stringers, and floor beams to remain in place.

10) Once all truss panels (top chord, upper bracing, verticals, diagonals) have been removed, proceed with floor system removal. Floor system removal shall progress panel by panel from north to south. Remove deck, stringers, floor beams, and lower chord. Remove falsework.

BRIDGE REMOVAL PROCEDURE (continued)

For preservation, the disassembled superstructure will be stored without paint removal in Indiana in a manner that conforms with PENNDOT, DEP or Indiana requirements, whichever are strictest. While the disassembled superstructure can be covered, we recommend not doing so as the covering will trap moisture.

SUBSTRUCTURE REMOVAL:

11) Using specialized equipment, pick up abutment stones, match mark them and place them on roadway, per specification. (NOTE: The abutment stones will be lifted using custom made lifting device which works along the same principle as a pair of ice block tongs but utilizing cushioned face plates so as not to damage the stone and adjustable for both width and length. Lifting will be provided by either the boom truck or a track hoe. The stones will be marked on their back sides.)

12) Complete grading of abutment area and site cleanup in accordance with the contract documents.

13) Install barriers.

P. JOSEPH LEHMAN, INC.
CONSULTING ENGINEERS

SUBJECT CAMBRIA COUNTY BR 1
TRUSS REMOVAL

SHEET NO. 1 OF 7
PROJECT NO. 7033

BY AMC DATE 12/08/2021
CHKD. BY ---

REV DATE
CHKD. BY

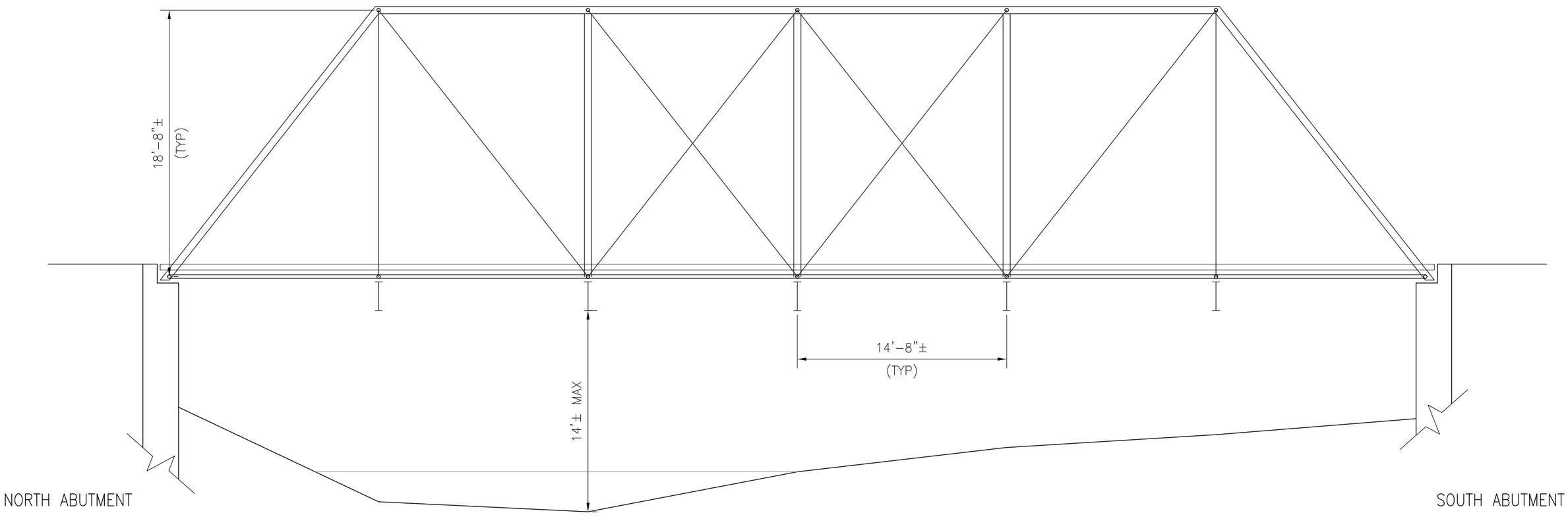

EXISTING BRIDGE - ELEVATION

NOT TO SCALE

DATE: 12/08/21 - 05:26 PM USER: acraig FILE: C:\Users\acraig\Documents\AMC_Docs\TEMP\7033 Wrought Iron Bridge Works - Cambria County Bridge 1\Demo Plan\7033 Demo Sketches

P. JOSEPH LEHMAN, INC.
CONSULTING ENGINEERS

SUBJECT CAMBRIA COUNTY BR 1
TRUSS REMOVAL

SHEET NO. 2 OF 7
PROJECT NO. 7033

BY AMC DATE 12/08/2021
CHKD. BY ---

REV amc DATE 12/13/2021
CHKD. BY

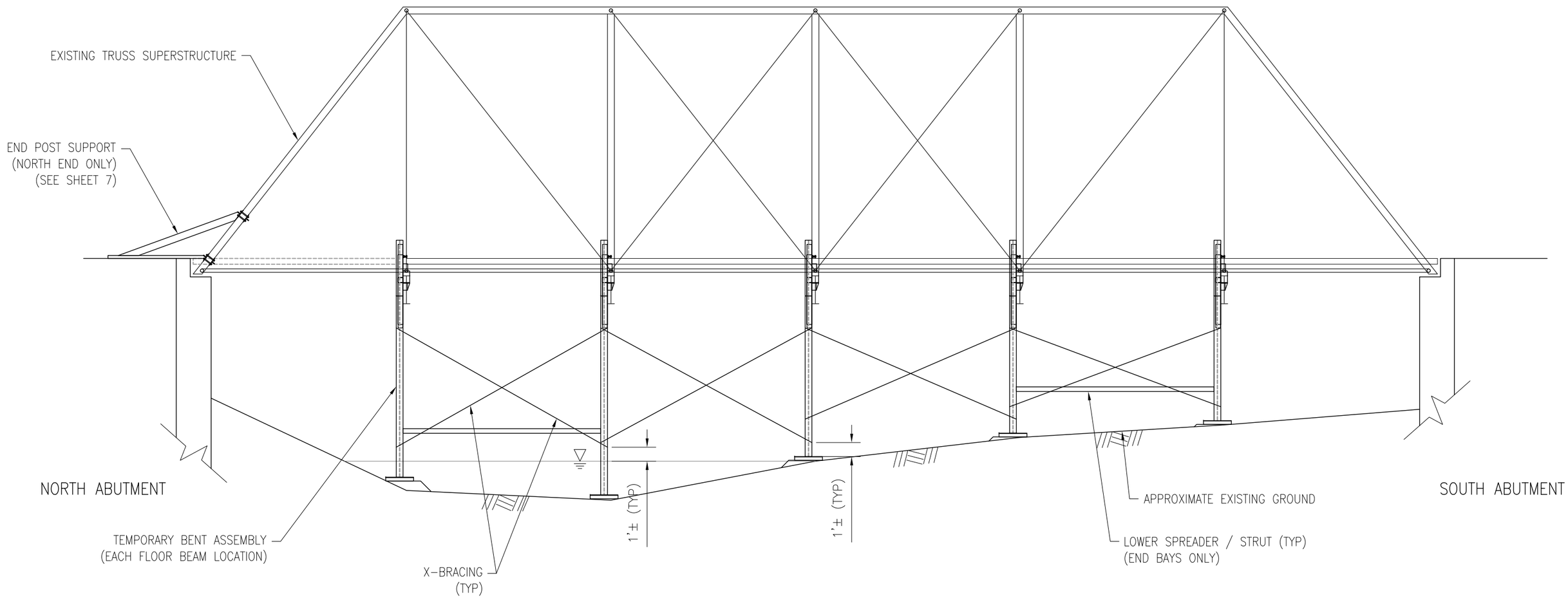

EXISTING BRIDGE - ELEVATION (W/ TEMPORARY SUPPORTS IN PLACE)

NOT TO SCALE

DATE: 12/13/21 - 11:58 AM USER: acraig FILE: G:\Projects\70xx\7033 Wrought Iron Bridge Works - Cambria County Bridge 1\Demo Plan\7033 Demo Sketches

P. JOSEPH LEHMAN, INC.
CONSULTING ENGINEERS

SUBJECT CAMBRIA COUNTY BR 1
TRUSS REMOVAL

SHEET NO. 3 OF 7
PROJECT NO. 7033

BY AMC DATE 12/08/2021
CHKD. BY ---

REV amc DATE 12/13/2021
CHKD. BY

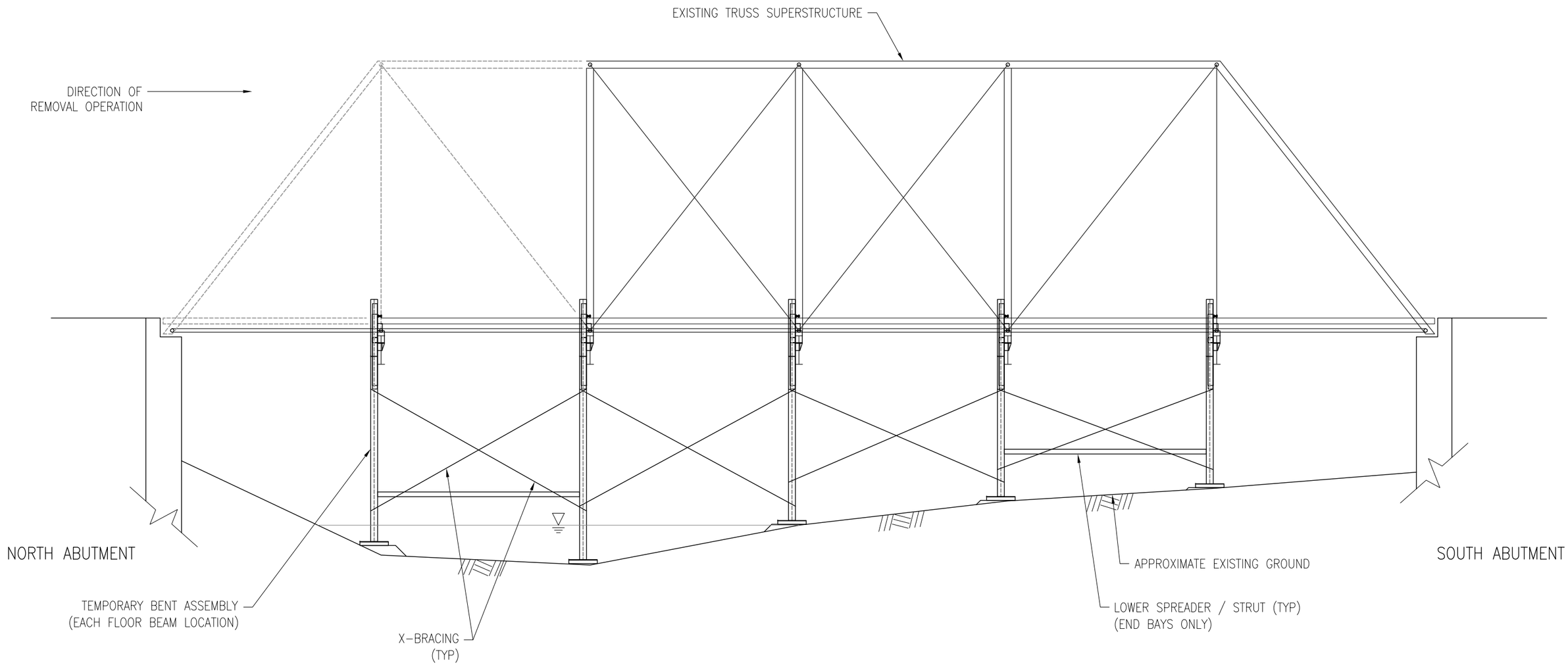

EXISTING BRIDGE REMOVAL - ELEVATION (W/ TEMPORARY SUPPORTS IN PLACE)

NOT TO SCALE

DATE: 12/13/21 - 11:58 AM USER: acraig FILE: G:\Projects\70xx\7033 Wrought Iron Bridge Works - Cambria County Bridge 1\Demo Plan\7033 Demo Sketches

P. JOSEPH LEHMAN, INC.
CONSULTING ENGINEERS

SUBJECT TRUSS REMOVAL
CAMBRIA COUNTY BR 1

SHEET NO. 4 OF 7
PROJECT NO. 7033

BY AMC DATE 12/08/2021
CHKD. BY ---

REV amc DATE 12/13/2021
CHKD. BY

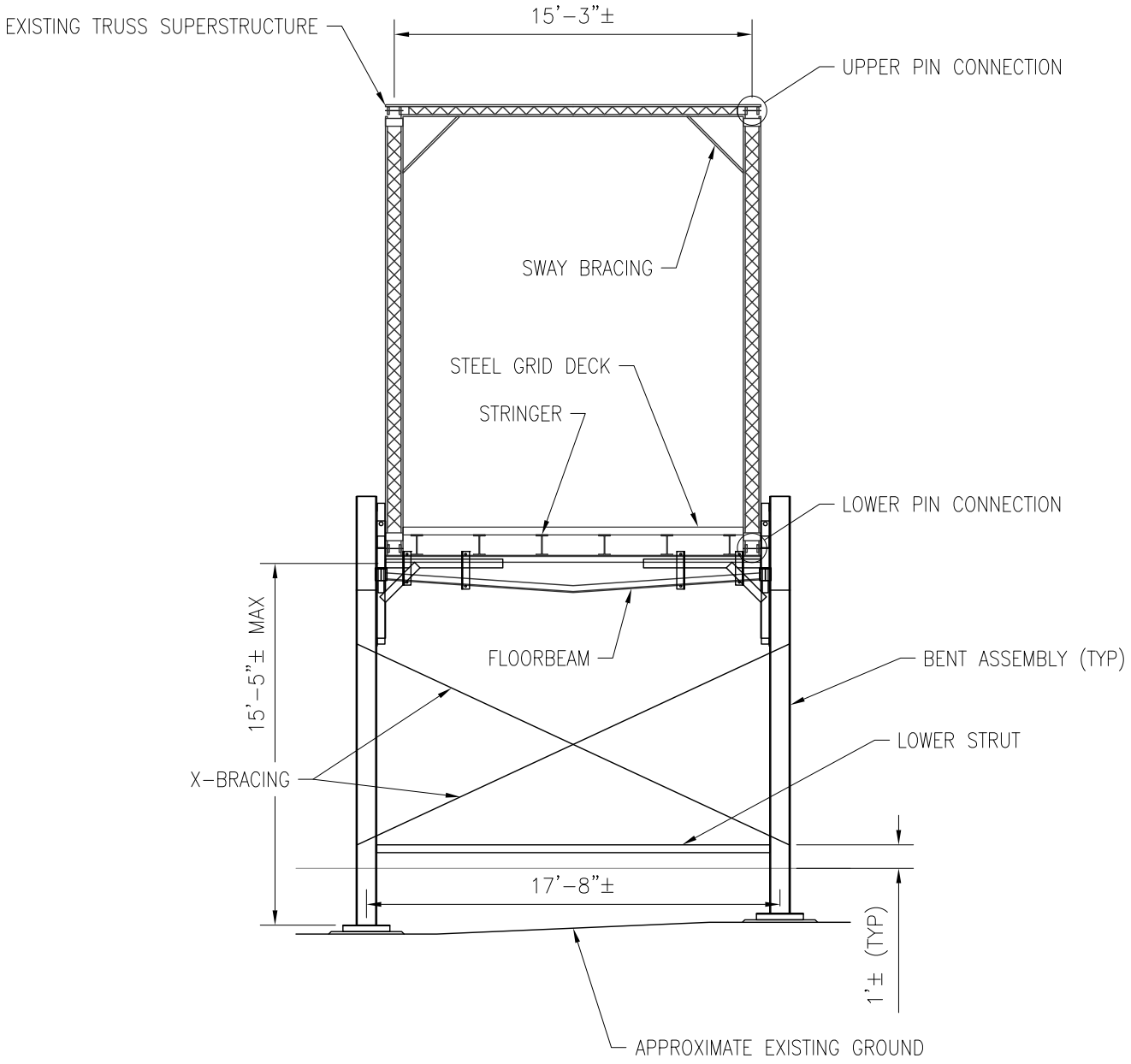

TRUSS TYPICAL SECTION (W/ TEMPORARY BENT ASSEMBLY)

NOT TO SCALE

FILE: G:\Projects\70xx\7033 Wrought Iron Bridge Works - Cambria County Bridge 1\Demo Plan\7033 Demo Sketches
USER: acraig
DATE: 12/13/21 - 11:58 AM

P. JOSEPH LEHMAN, INC.
CONSULTING ENGINEERS

SUBJECT TRUSS REMOVAL
CAMBRIA COUNTY BR 1

BY AMC DATE 12/08/2021
REV amc DATE 12/13/2021

SHEET NO. 5 OF 7
PROJECT NO. 7033
CHKD. BY ---
CHKD. BY

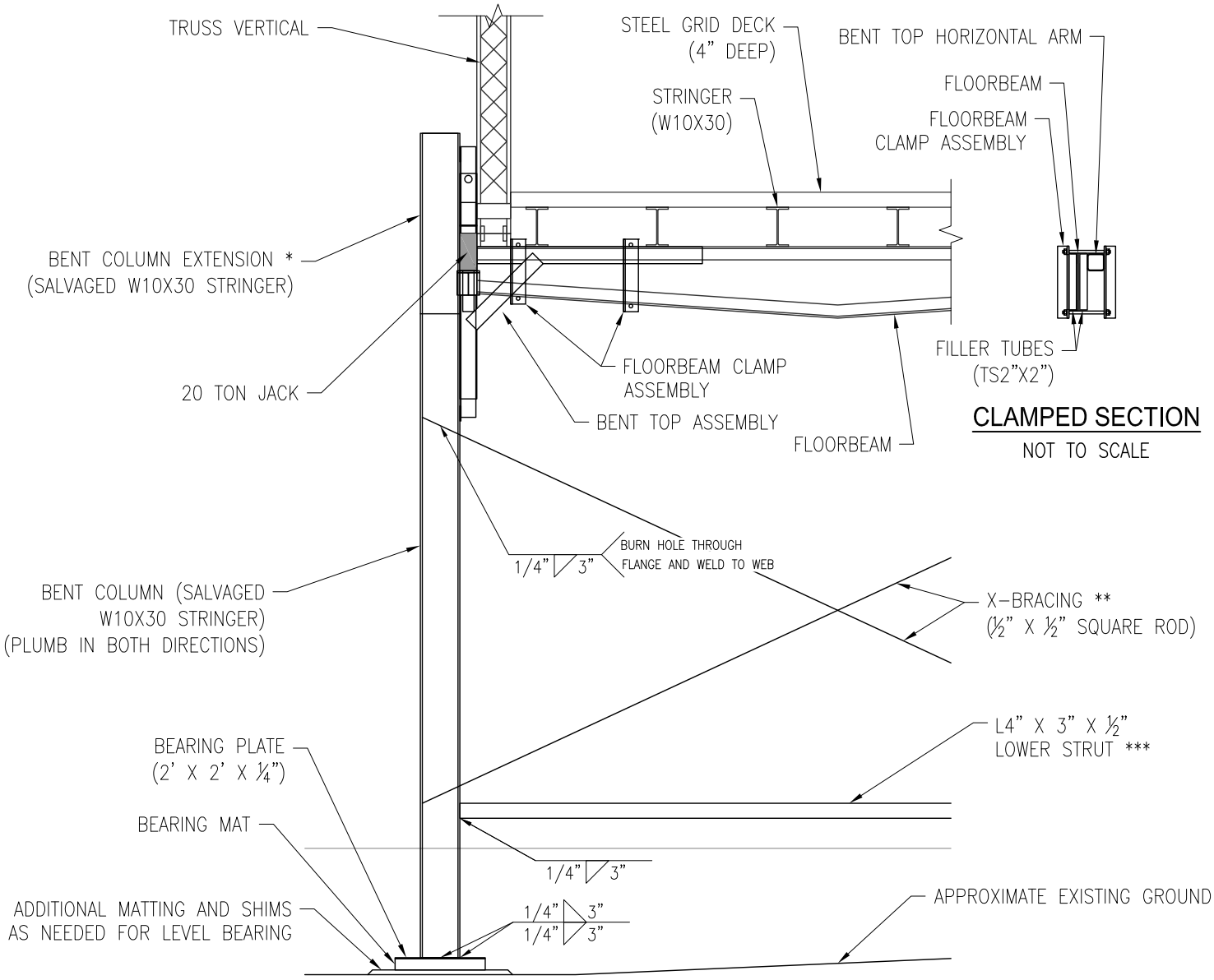

PARTIAL TYPICAL SECTION (W/ TEMPORARY BENT ASSEMBLY)

NOT TO SCALE

* AS NEEDED BASED ON LOCATION AND REQUIRED HEIGHT. SPLICE TO PRIMARY COLUMN ELEMENT (FULL FLANGE AND WEB SPLICE WELDS).

** X-BRACING IN PERPENDICULAR DIRECTION (NOT SHOWN) WILL BE OF SAME CONFIGURATION AND WILL BE ATTACHED TO THE FACE OF THE FLANGE OF THE BENT COLUMN WITH SIMILAR WELDS.

** LOCATE LOWER STRUTS PARALLEL TO STREAM FLOW APPROX 1' ABOVE NORMAL WATER OR EXISTING GROUND WHICHEVER IS HIGHER. LOCATE LOWER STRUTS PARALLEL TO TRUSS BOTTOM CHORD APPROX 2' ABOVE NORMAL WATER OR EXISTING GROUND WHICHEVER IS HIGHER. ATTACH ALL LOWER STRUTS TO VERTICAL BENT COLUMN IN SIMILAR FASHION.

DATE: 12/13/21 - 12:01 PM USER: acraig FILE: G:\Projects\70xx\7033 Wrought Iron Bridge Works - Cambria County Bridge 1\Demo Plan\7033 Demo Sketches

P. JOSEPH LEHMAN, INC.
CONSULTING ENGINEERS

SUBJECT TRUSS REMOVAL
CAMBRIA COUNTY BR 1

SHEET NO. 6 OF 7
PROJECT NO. 7033

BY AMC DATE 12/08/2021
CHKD. BY ---

REV amc DATE 12/13/2021
CHKD. BY

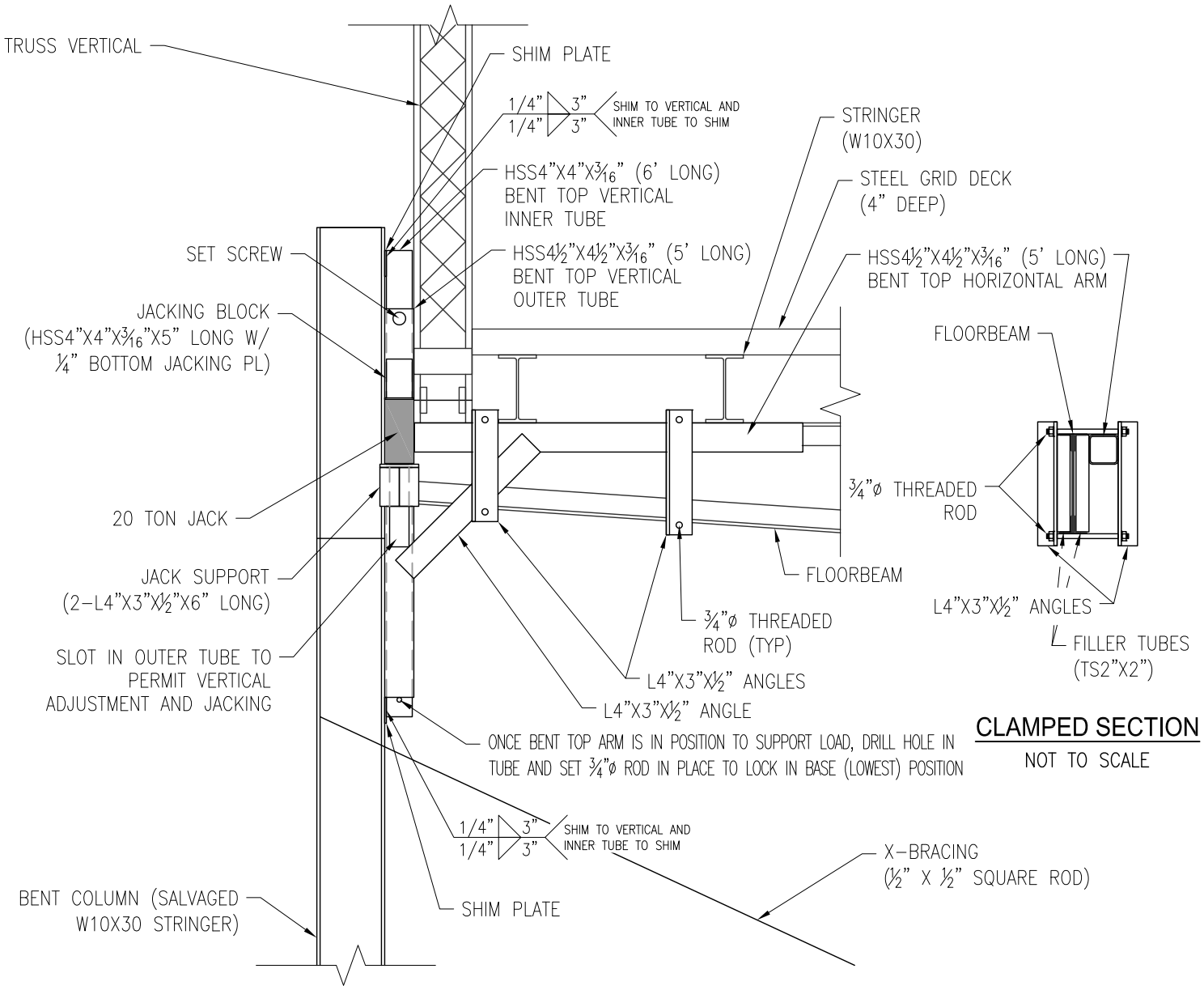

CLAMPED SECTION
NOT TO SCALE

PARTIAL TYPICAL SECTION (W/ TEMPORARY BENT ASSEMBLY)
NOT TO SCALE

FILE: G:\Projects\70xx\7033 Wrought Iron Bridge Works - Cambria County Bridge 1\Demo Plan\7033 Demo Sketches
USER: acraig
DATE: 12/13/21 - 12:16 PM

P. JOSEPH LEHMAN, INC.
CONSULTING ENGINEERS

SUBJECT TRUSS REMOVAL
CAMBRIA COUNTY BR 1

BY AMC DATE 12/08/2021

REV DATE

SHEET NO. 7 OF 7
PROJECT NO. 7033
CHKD. BY ---
CHKD. BY

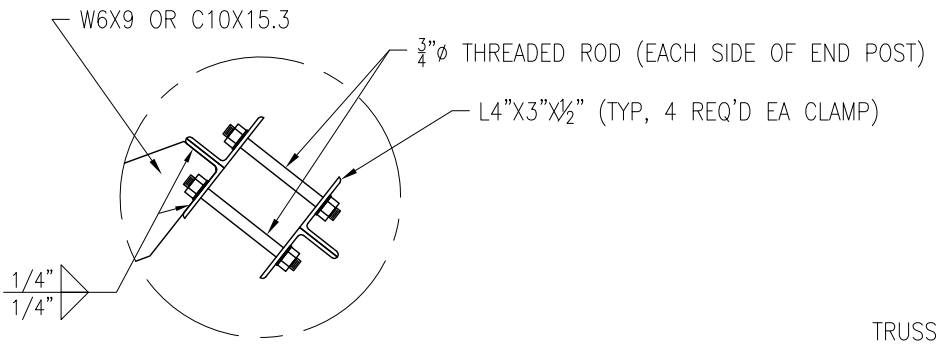

END POST CLAMP
NOT TO SCALE

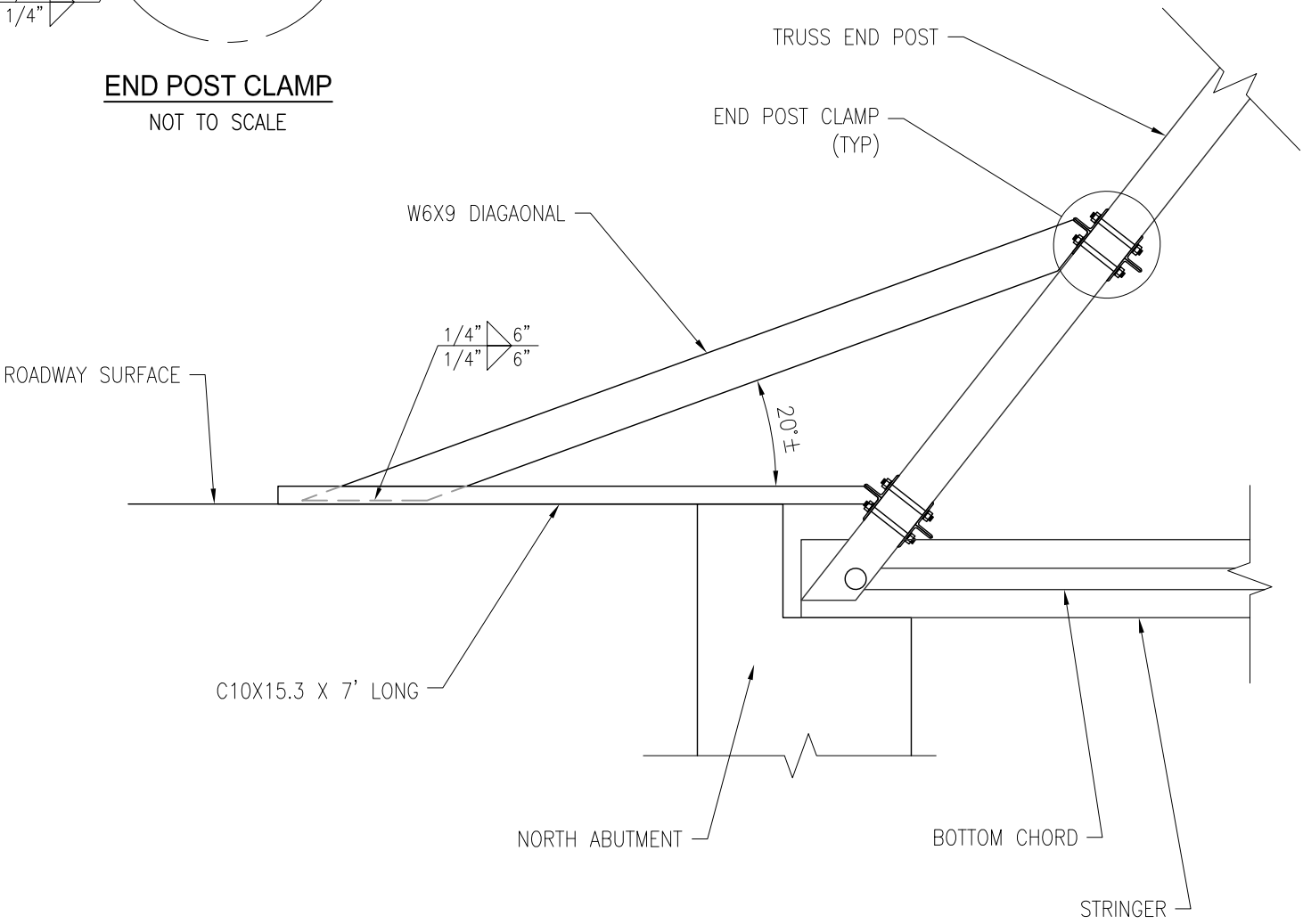

END POST SUPPORT
NOT TO SCALE

FILE: C:\Users\acraig\Documents\AMC_Docs\TEMP\7033 Wrought Iron Bridge Works - Cambria County Bridge 1\Demo Plan\7033 Demo Sketches
USER: acraig
DATE: 12/08/21 - 05:36 PM

Section 2: Methodology and Calculations

REMOVAL METHODOLOGY AND CALCULATIONS SUMMARY

GENERAL METHODOLOGY & REMOVAL SUMMARY

The proposed disassembly and removal procedure is intended to proceed in approximately the reverse order of the original truss erection and utilizes a re-usable custom bent system instead of a crane. Although in-stream, the technique has a lighter environmental footprint, and is safer for both the personnel and the compromised historic structure.

Duration of the removal operation is anticipated at 45 days.

Removal will be accomplished via support from beneath using bents lifting on the floor beams.

Primary structure of the bents will be a vertical at each floor beam end consisting of I-beams sourced locally. (Bents will be fabricated on site using the stringers—measured to be W10X30—from the northernmost two panels as the main vertical element. The bent tops will be welded to the W10X30s.) These will rest on bearing plates and pads and support jacking bent tops. The verticals will be stabilized using X- bracing (½" square rod) in each direction and a lower spreaders as indicated in the sketches. The bent heads will be secured to the floor beam (acting as an upper spreader).

Fig. 1 Bent tops being prepared.

REMOVAL METHODOLOGY AND CALCULATIONS SUMMARY (continued)

Fig 2. Bent top assemblies being prepared, showing jack placement.

Manual hydraulic 20-ton jacks will be utilized. The jacks will allow for a release of load at the panel points. The jacks are attached to a platform which is secured via a slot to the inner (stationary) tube which, in turn, is secured to the bent column. The jack ram applies force to the outer tube and arm which are free to move, then locked in the desired position. The horizontal arm is secured to the floor beam. Due to deterioration and prior repair work, there will be variance in the attachment points to ensure robust support.

The elements will be fabricated using MIG and stick arc welding as appropriate utilizing 0.035” E70S-6 and 3/32 and 1/8 E6011, E6010, and E7018. The welds will typically be 3/8”. All welding will be performed by Ross Brown, who has 35+ years of experience, is certified (in IN where the welding is being done), and will be performing the superstructure disassembly.

A minimal surface area will be exposed to stream flow, and a moderate flood event is not anticipated to create significant lateral load, especially considering the debris clearing flood which occurred in September.

All load bearing points will have 2’ X 2’ X ¼” plate with a horse mat type surface affixed to the underside to minimize load and disturbance to the existing ground and stream bottom. Anticipated superstructure weight is under 25,000 pounds (without deck and stringers, double with deck and stringers). This assumption is based on the weight of the Carlton Bridge, an 1888 Pratt through truss of 136’ span weighing 24,000 pounds when lifted (without deck and stringers). The 2009 inspection report of Cambrian County Bridge 1 indicates the reaction at each corner (bearing) to be 12,300 pounds (49,200-pound superstructure weight estimate). As both estimations place the total superstructure weight at 48,000 – 50,000 pounds. The higher superstructure weight of 50,000 pounds is used for the calculations.

With bents installed at each floor beam there will be 14 load points (including the end posts). However, to be conservative, the end posts will be excluded from the calculation, and only 10 load points will be considered. This results in a distributed load of 5,000 pounds per load point (1,250 psf / 8.7 psi bearing pressure on the ground). Doubling the anticipated peak load per bent leg to 10,000 pounds to account for uneven load distribution from jacking during setup and pin release results in a bearing pressure of 2,500 (17.4psi). For short term loading conditions, an allowable bearing pressure of 3,000 psf to 4,000 psf is reasonable, especially for the existing streambed material present at the site.

Stability of the north abutment is questionable. To reduce load / risk related to the failing abutment, end post supports will be fitted to each of the northern end posts, extending beyond the abutment onto the roadway. This will provide additional support of the end posts on the roadway and reduce the effects of load change or movement during false work setup.

REMOVAL METHODOLOGY AND CALCULATIONS SUMMARY (continued)

Having the full load of the superstructure carried by the falsework will minimize environmental impact, reduce stress on to historic structure and failing abutment, and allow for correct disassembly (the reverse of the original assembly procedure).

CALCULATIONS SUMMARY

In general, assumptions made herein are intended to be conservative. Engineering judgment is exercised as deemed appropriate.

Based on the proposed method of removal, no calculations are provided or deemed necessary for evaluation of global truss stability during the operation. The removal procedure will approximately follow the reverse of the original construction sequence (assumed, typical truss sequencing and construction methods of the period). The removal procedure will result in unloading of the truss members (axial loads). Lateral and longitudinal stability is provided by the existing bracing in each panel and will be supplemented as needed during each panel removal by temporary installation of chains, straps, and/or steel angle or tubing.

No calculations are provided for the end post supports since these are provided for additional stability only.

No calculations are provided for global stability of the bent system as lateral and longitudinal loads from environmental sources are anticipated to be minimal.

Based on the proposed loads and the robust nature and construction of the bent tops, no detailed calculations for the bent top assemblies are included.

The calculations for the removal are as follows:

- Bridge weight and support load (also described in narrative above)
- Temporary supports:
    - Bearing pressure (also described in narrative above)
    - Evaluation of bent column
    - Bent column to bent top connection
    - Floor beam clamp connection

P. JOSEPH LEHMAN, INC.
CONSULTING ENGINEERS

SUBJECT _____ SHEET NO. ____ OF ____
PROJECT NO. _____
BY AMC DATE _____ CHECKED BY _____

BRIDGE WEIGHT & SUPPORT LOAD

FROM 2009 INSPECTION REPORT, BART ANALYSIS, SUPPORT REACTIONS AT BRIDGE ENDS:

R = 12.3^k (DEAD LOAD)
× 4 CORNERS

49.2^k TOTAL BRIDGE WEIGHT

÷ 10 SUPPORTS — WHEN SUPPORTED AT LOWER POINTS, MINIMAL REACTIONS AT ABUTMENTS

4.9^k/SUPPORT → SAY 5^k/SUPPORT (UNFACTORED)

FOR JACKING PURPOSES, ASSUME POTENTIAL UNEVEN LOADING, USE 10^k/SUPPORT FOR DESIGN.

USE 20 TON JACKS

$$\frac{20^T \times 2000^{\#}/\text{TON}}{10{,}000^{\#}} = 4 \text{ SAFETY FACTOR}$$

OK

P. JOSEPH LEHMAN, INC.
CONSULTING ENGINEERS

SUBJECT _____ SHEET NO. ____ OF ____
PROJECT NO. _____
BY AWC DATE _____ CHECKED BY _____

TEMPORARY SUPPORT

FROM PREVIOUS CALCS...

P = 10^k / SUPPORT

BEARING ON STREAMBED:

10^k / 2'×2' PLATE = 2500 PSF OK

STREAMBED IS "COBBLES & BOULDERS".
ANTICIPATED LOAD OK FOR SHORT TERM.

MAX SUPPORT POST HEIGHT ~ 15'
LOAD ECCENTRICITY ~ 40" LATERAL & 1/2" LONGITUDINAL

SEE ENERCALC ANALYSIS — OK

Steel Column

Description

Support Post - W10x30 stringer (33 ksi) (w/ H20)

conservative based on 2009 inspection report sketches

General Information

Code Ref: AISC 9th ASD, 1997 UBC, 2003 IBC, 2003 NFPA 5000

Steel Section	**W10X30**	Fy	33.00 ksi	X-X Sidesway :	Restrained
		Duration Factor	1.000	Y-Y Sidesway :	Restrained
Column Height	16.000 ft	Elastic Modulus	29,000.00 ksi		
End Fixity	Pin-Pin	X-X Unbraced	16.000 ft	Kxx	1.000
Live & Short Term Loads Combined		Y-Y Unbraced	16.000 ft	Kyy	1.000

Loads

assumed. conservative.

Axial Load...

Dead Load	k	Ecc. for X-X Axis Moments	42.000 in
Live Load	10.00 k	Ecc. for Y-Y Axis Moments	1.000 in
Short Term Load	k		

Distributed lateral Loads...	DL	LL	ST		Start		End
Along Y-Y		0.200		k/ft		-->	8.000 ft
Along X-X				k/ft		-->	4.000 ft

assumed. lateral load due to water. conservative.

Summary

Column Design OK

Section : W10X30, Height = 16.00ft, Axia 0.00k, Ecc. = 42.000in

Unbraced Lengths: X-X = 16.00ft, Y-Y = 16.00ft

Combined Stress Ratios	Dead	Live	DL + LL	DL + ST + (LL if Chosen)
AISC Formula H1 - 1				
AISC Formula H1 - 2				
AISC Formula H1 - 3		0.9510	0.9510	0.9510

XX Axis : Fa calc'd per Eq. E2-2, K*L/r > Cc
XX Axis : I Beam, Major Axis, (102,000 * Cb / Fy)^.5 <= L/rT <= (510,000 * Cb / Fy)^.5 , Fb per Eq. F1-6
XX Axis : I Beam, Major Axis, Fb per Eq. F1-8, Fb = 12,000 Cb Af / (l * d)
YY Axis : Fa calc'd per Eq. E2-2, K*L/r > Cc
YY Axis : I Beam, Minor Axis, Passes Table B5.1, Fb = 0.75 Fy per Eq. F2-1

Stresses

Allowable & Actual Stresses	Dead	Live	DL + LL	DL + Short
Fa : Allowable	7.65 ksi	7.65 ksi	7.65 ksi	7.65 ksi
fa : Actual	0.00 ksi	1.13 ksi	1.13 ksi	1.13 ksi
Fb:xx : Allow [F1-6]	17.69 ksi	17.69 ksi	17.69 ksi	17.69 ksi
Fb:xx : Allow [F1-7] & [F1-8]	17.69 ksi	17.69 ksi	17.69 ksi	17.69 ksi
fb : xx Actual	0.00 ksi	12.96 ksi	12.96 ksi	12.96 ksi
Fb:yy : Allow [F1-6]	24.75 ksi	24.75 ksi	24.75 ksi	24.75 ksi
Fb:yy : Allow [F1-7] & [F1-8]	24.75 ksi	24.75 ksi	24.75 ksi	24.75 ksi
fb : yy Actual	0.00 ksi	1.74 ksi	1.74 ksi	1.74 ksi

Analysis Values

F'ex : DL+LL	77,901 psi	Cm:x DL+LL	1.00	Cb:x DL+LL	1.00
F'ey : DL+LL	7,653 psi	Cm:y DL+LL	0.60	Cb:y DL+LL	1.00
F'ex : DL+LL+ST	77,901 psi	Cm:x DL+LL+ST	1.00	Cb:x DL+LL+ST	1.00
F'ey : DL+LL+ST	7,653 psi	Cm:y DL+LL+ST	0.60	Cb:y DL+LL+ST	1.00

Max X-X Axis Deflection -0.230 in at 8.960 ft Max Y-Y Axis Deflection -0.049 in at 9.280 ft

Description Support Post - W10x30 stringer (33 ksi) (w/ H20)

Section Properties W10X30

Depth	10.470 in	Weight	30.03 #/ft	Values for LRFD Design....	
Web Thick	0.300 in	Ixx	170.000 in4	J	0.620 in4
Width	5.810 in	Iyy	16.700 in4	Cw	414.00 in6
Flange Thick	0.510 in	Sxx	32.400 in3	Zx	36.600 in3
Area	8.84 in2	Syy	5.750 in3	Zy	8.840 in3
Rt	1.550 in	Rxx	4.380 in	K	0.810 in
		Ryy	1.370 in		

Section Type = W

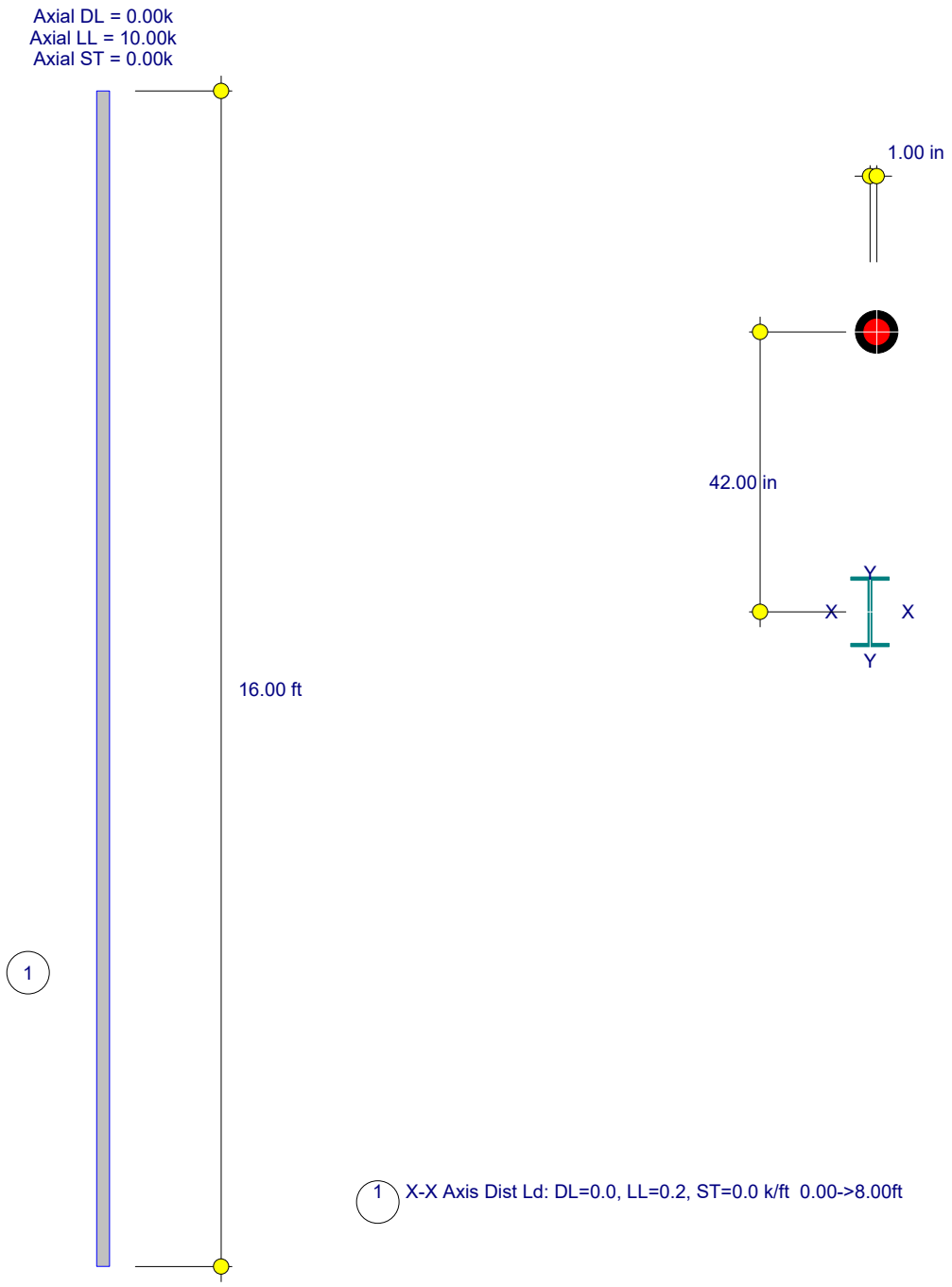
Axial DL = 0.00k
Axial LL = 10.00k
Axial ST = 0.00k
16.00 ft
1
1.00 in
42.00 in
X
X
Y
Y
1
X-X Axis Dist Ld: DL=0.0, LL=0.2, ST=0.0 k/ft 0.00->8.00ft

P. JOSEPH LEHMAN, INC.
CONSULTING ENGINEERS

SUBJECT _____ SHEET NO. ____ OF ____
PROJECT NO. _____
BY _____ DATE _____ CHECKED BY _____

TEMPORARY SUPPORT

BENT & BENT TOP

MAX VERTICAL LOAD = 10K (CONSERVATIVE, SEE PREVIOUS CALCS)

CONSERVATIVELY, DIAGONAL = $10^k / \sin 45°$ = 15K

MIN REQ'D WELD...

$(0.5)(0.6)(1/4")(0.707)(60\ ksi) = 3.18^k/in$ ALLOWABLE FOR 1/4" FILLET WELD

$15^k / 3.18^k/in = 4.72"$ ~ PROVIDE 6" MIN WELD AT ALL BENT-BENT TOP CONNECTIONS

OK

P. JOSEPH LEHMAN, INC.
CONSULTING ENGINEERS

SUBJECT _____ SHEET NO. ____ OF ____
PROJECT NO. _____
BY AMC DATE _____ CHECKED BY _____

TEMPORARY SUPPORT

FLOORBEAM CLAMP

MAX VERTICAL LOAD = 10^k (CONSERVATIVE, SEE PREVIOUS CALCS)

IGNORE FRICTION DUE TO CLAMPING.
ASSUME BEARING, SINGLE SHEAR.

$(0.5)\frac{\pi}{4}(3/4")^2(36\ ksi) = 7.9^k/ROD$ => PROVIDE MIN 2 RODS AT EACH SUPPORT LOCATION BELOW FLOORBEAM & ABOVE BENT TOP HORZ ARM.

CONSERVATIVE, MIN YIELD.

TRUSS REMOVAL PLAN

Red Mill Road over North Branch Blacklick Creek - Cambria County Bridge 1

KEI # 3413